S318N, S318N-24 Interface Relays

- Heavy-duty interface relay, suitable for switching inductive loads such as electromagnetic door locks.
- Double-pole changeover contacts rated at 8A at 30V DC or 8A at 250V AC.
- LED indication when the relay is energised.
- Back EMF suppression and reverse polarity protection.
- Can be mounted using the 4mm fixing holes or supplied self-adhesive backing.

Figure 1 Schematic drawing

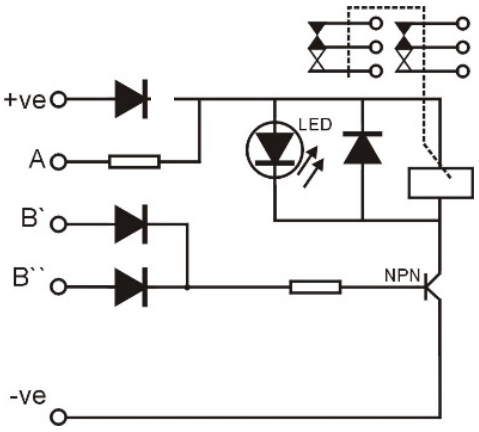

Figure 2 PCB Technical drawing

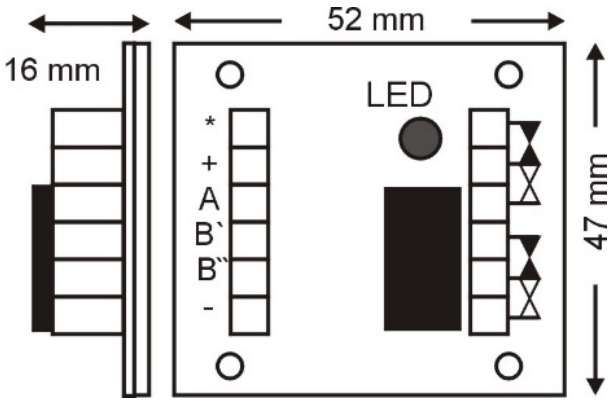

The following examples require a permeant voltage applied to + & -, voltage depends on variant.

Example 1

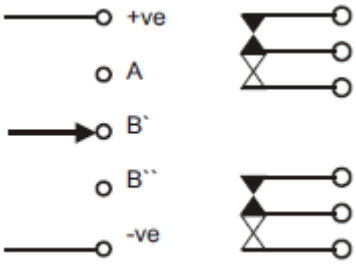

Applying a positive signal greater than 4V to either B' or B'' will energise the relay. Removing the signal will de-energise the relay.

Example 2

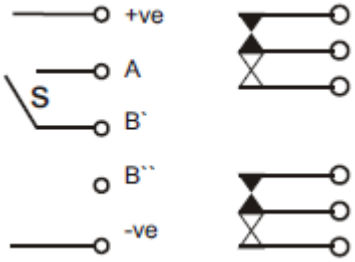

Closing switch S will energise the relay. Opening the switch will de-energise the relay.

Example 3

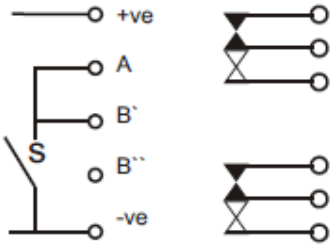

Opening switch S will energise the relay. Closing the switch will de-energise the relay.

Example 4

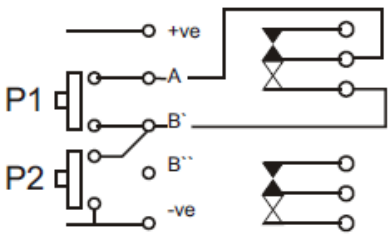

Press P1 to energise the relay. The relay will remain energised after P1 is released. Press P2 to de-energise the relay.

Hoyles Electronic Developments Ltd
Sandwash Close, Rainford, St Helens, WA11 8LY, UK
www.hoyles.com
sales@hoyles.com
+ 44 (0) 1744 886600